Fleur Bath Sconces

8175
8176
8177

Project Name _____

Fixture Type _____

Quantity _____

Norwell | Lighting

ILEX

Custom Metalcraft

1 Light
Matte Black / MB

2 Light
Chrome / CH

3 Light
Matte Black / MB

8175

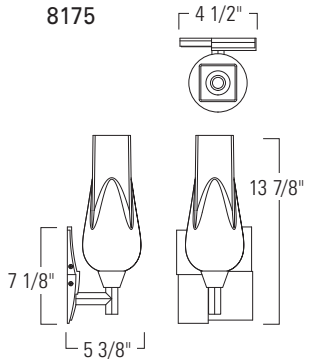

8176

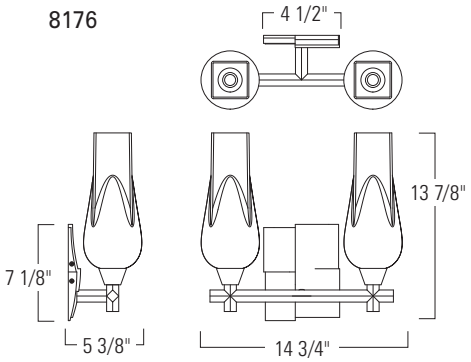

8177

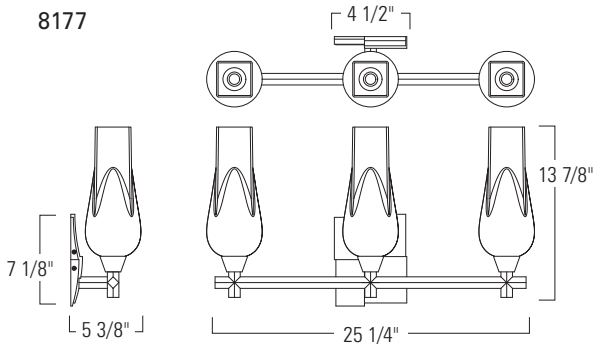

Product Name / Model / Dimensions	Finish Options	Diffuser	Lamping Options
Fleur 1 Light Sconce - 8175 Fleur 2 Light Sconce - 8176 Fleur 3 Light Sconce - 8177	Standard Chrome (CH) Matte Black (MB)	Standard Matte Opal (MO) Glass	Standard Incandescent 8175 1-40 Watt Candelabra 120v, B10 Type 8176 2-40 Watt Candelabra 120v, B10 Type 8177 3-40 Watt Candelabra 120v, B10 Type

	Height	Width	Projection
8175	13.875"	5.625"	5.375"
8176	13.875"	14.75"	5.375"
8177	13.875"	25.25"	5.375"

Backplate 7.125" H X 5.625" W

UL/ETL Listed Damp Location Rated

11-2021

DISCLAIMER:
Norwell Lighting and its companies, ILEX Architectural Lighting and Custom Metalcraft reserve the right to change specifications related to its product at anytime. USA Made indicates product is manufactured in East Taunton, Massachusetts facility. Phone: 508-823-1751