American Onion

AMERICAN MADE
Outdoor
Sconces and Posts
1710, 1711, 1712, 1713

Project Name _____

Fixture Type _____

Quantity _____

Norwell | Lighting
ILEX
Custom Metalcraft

USA Made
Lifetime Guarantee

American Onion Small Sconce
Copper / **CO**

American Onion Small Sconce
Aged Brass / **AG**

American Onion Large Sconce
Gun Metal / **GM**

1713

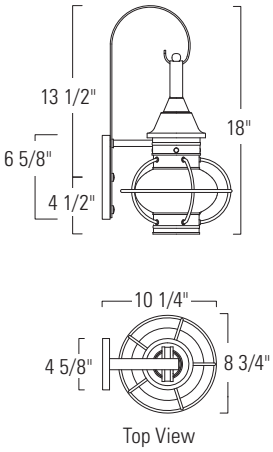

1712

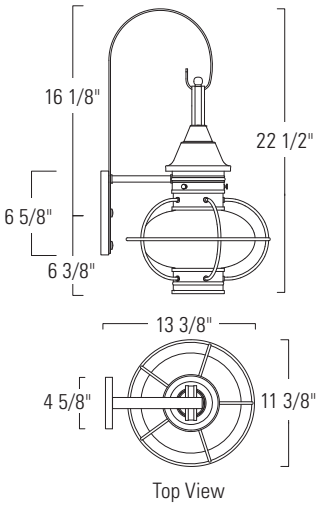

American Onion Medium Post
Satin Brass / **SB**

American Onion Large Post
Matte Black / **MB**

American Onion Large Sconce
Antique Brass / **AN**

1711

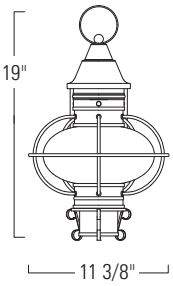

1710

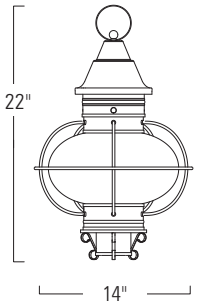

Product Name / Model / Dimensions	Finish Options	Diffuser	Lamping Options
American Onion Small Sconce - 1713 American Onion Large Sconce - 1712 American Onion Medium Post - 1711 American Onion Large Post - 1710	Standard Aged Brass / **AG** Antique Brass / **AN** Copper / **CO** Gun Metal / **GM** Matte Black / **MB** Satin Brass / **SB**	Standard Clear Glass / **CL**	Standard 1- 100W max medium base edison

	Height	Width	Projection
1713	18"	8 3/4"	10 /14"
1712	22 1/2"	11 3/8"	13 3/8"
1711	19"	11 3/8"	
1710	22"	14"	

Backplate 6 5/8" H x 4 5/8" W

UL/ETL Listed and Wet Location Rated

12-2021

DISCLAIMER:
Norwell Lighting and its companies, ILEX Architectural Lighting and Custom Metalcraft reserve the right to change specifications related to its product at anytime. USA Made indicates product is manufactured in East Taunton, Massachusetts facility. Phone: 508-823-1751